REVISIONS			
REV	DESCRIPTION	DATE	NAME
.	.	.	.

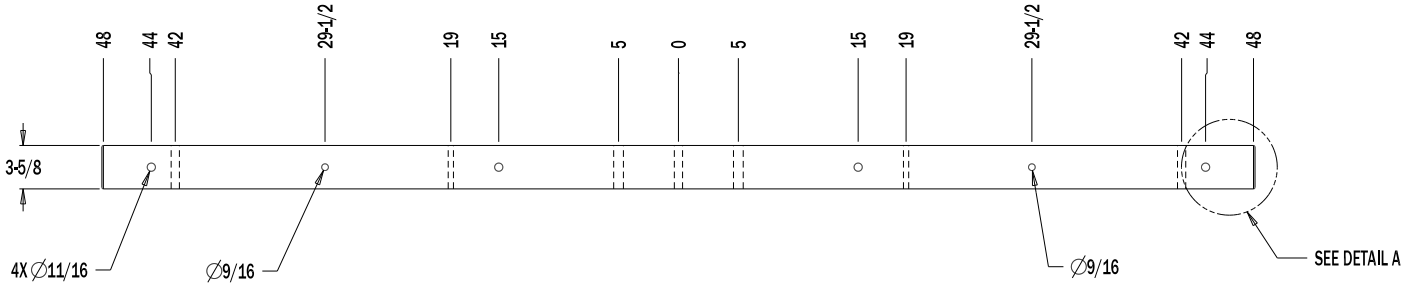

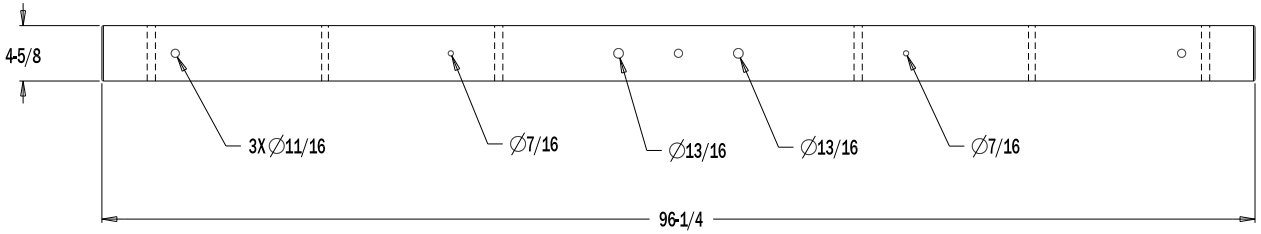

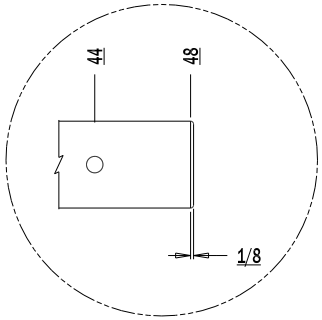

DETAIL A
SCALE 2:1

PUPI DIVISION, GEOTEK
PROPRIETARY INFORMATION,
CONFIDENTIAL,
DO NOT DUPLICATE.

GEOTEK (507) 533-6076
1421 2ND AVENUE NW, STEWARTVILLE, MN 55976

T220009604X2

DRAWN BY	EFH	SIZE	FSCM NO.	DWG NO.	REV
DATE	03-JAN-11	A	NONE	T220009604X2	0
		SCALE 1/16:1	REPLACES C22-96-04XB		SHEET 1 OF 1